SERVICE MANUAL OF DIESEL OIL TANK

JFC9000



JFC Polska Sp. z o. o.
Karpin, ul. Białostocka 1
05-252 Dąbrówka
Tel: 029 7578377, 7578098
Fax: 029 7578201
E-mail: info@jfcpolska.com
Web: www.jfcpolska.com

TABLE OF CONTENTS

Table of contents

I. Application
II. Technical data and equipment
III. Operation
- **1.** Transportation and foundation – guidelines
- **2.** Electrical connection – guidelines
  - 2.1. Ground
  - 2.2. Over-current protection
  - 2.3. Temporary electrical connection
- **3.** JFC9000 maintenance

IV. Safety rules during operation of JFC9000 tank
- **1.** Information about dangerous substance
- **2.** Hazards that may be posed by stored material (diesel) and ways of minimizing them
- **3.** Guidelines for persons authorized to operate the tank JFC9000

V. Warranty
- **1.** Warranty Card

VI. Operating/ damage/ repair reports
- **Tab.1.** List of standard maintenance activities for JFC9000
- **Tab.2.** Report of damage and repairs of JFC9000
- **Tab.3.** Failure Notification Form

Appendix No. 1: Assembly drawings of fuel storage tank JFC9000
Appendix No. 2: Service Manual of Piusi pump type Panther 56/79 (230V/50Hz)
Appendix No. 3: Service Manual of Piusi flow meter type K24 (digital)
Appendix No. 4: Service Manual of Piusi flow meter type K33 (analog)
Appendix No. 5: Service Manual of Piusi flow meter type K600 (digital)
Appendix No. 6: Service Manual of level indicator and leak sensor Watchman Sonic Plus
Appendix No. 7: Service Manual of GMO sensor Type GWD (limit sensor)
Appendix No. 8: Service Manual of SpillStop (overfill protection valve)
Appendix No. 9: Service Manual of level indicator and leak sensor Tekelek 574
Appendix No. 10: Service Manual of level indicator and leak sensor Tekelek 603

Service Manual is of auxiliary nature and does not constitute a source of law.
Compliance with the Manual does not exempt from the obligation to comply with local laws.

I. APPLICATION

JFC9000 ground tank is designed for storage and in-plant distribution of oils belonging to the group of flammable liquids of the III fire hazard class such i.e. petroleum products with an ignition point above 55 °C, including diesel oil.
The tank is manufactured in accordance with PN-EN 13341:2005 + A1: 2011 under the supervision of the UDT - Office of Technical Inspection. The tank is designed as a self-supporting structure, with a vertical axis, double-jacket, made of polyethylene PE-LLD, UV stabilized. A tight distribution cabinet (HDPE) with the door secured with two locks is mounted to the external tank. The cabinet contains distribution hardware and monitoring systems.

II. TECHNICAL DATA AND EQUIPMENT

Tank type	Nominal Capacity [L]	Filling Capacity* [L]	Dimensions **		
			L[m]	W[m]	H[m]
JFC9000	9000	8550	3,26	2,60	2,52

* The filling capacity is 95% of the nominal capacity of the tank.
** Due to the properties of PE material from which the tanks are made, the dimensions may vary +/- 1%.

The complete device with the distribution system includes:
1. Double-jacket tank with a distribution cabinet (secured with two locks).
2. Distribution system, including*:
    - pump with a nominal flow from 50 to 120 l/min, 230V/50Hz [1],
    - flexible suction hose with a non-return valve and filter [2],
    - fuel filter [3],
    - digital flow meter [4],
    - automatic filling nozzle with an overflow protection [5],
    - flexible distribution hose with a length of 6m [6].
3. Monitoring system composed of:
    - leakage sensor with built-in tank level measurement (ultrasonic) [7]
    - electronic overflow sensor (limit level indicator to be connected to the control system of the dispensing system of the loading cistern) [8]
4. Inspection cover in the inner tank D16” [10].
5. Inspection cover in the external tank, secured with a padlock.
6. Inlet cap diameter 120mm with integrated venting-aeration valve [11].
7. Ground connection [12].

As an optional equipment* tanks can be assembled with:
- down filling line with Spillstop DN50 (overfilling protection valve), DN50 filling pipe, shut-off ball valve, Camlock/TW coupling 2”/3” [10];
- LED lighting in distribution box;
- Electrical connection box with fuses;
- Distribution hose on reel.

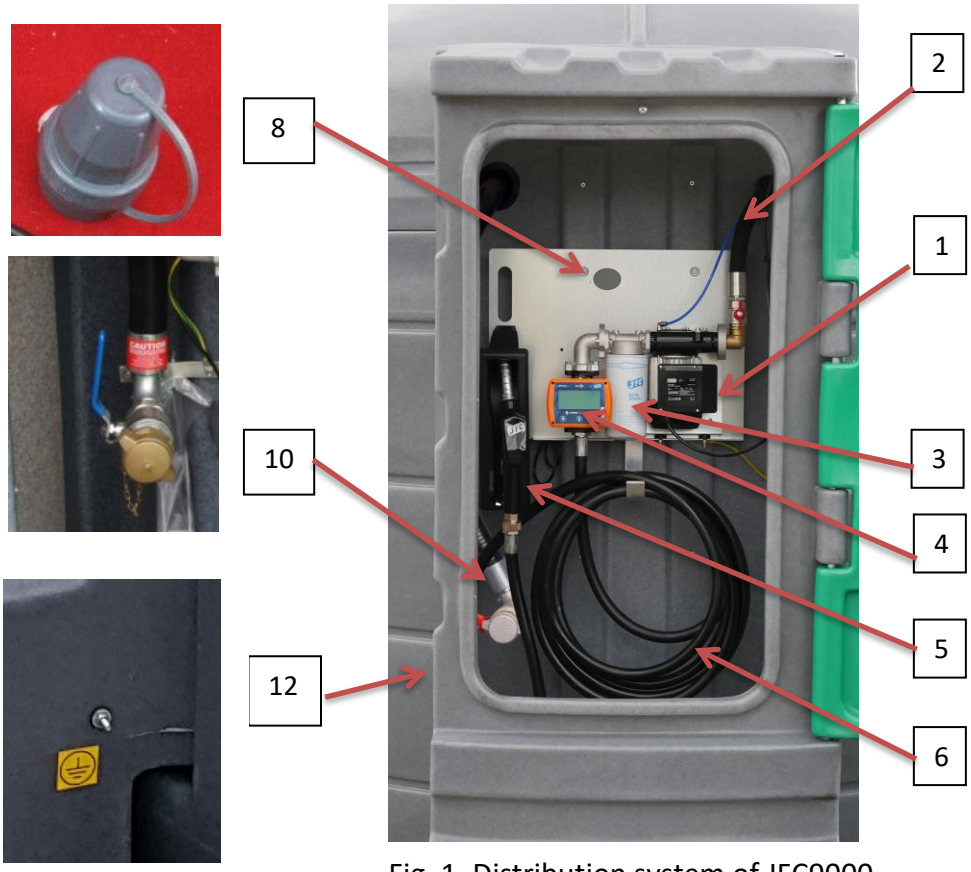

Fig. 1. Distribution system of JFC9000

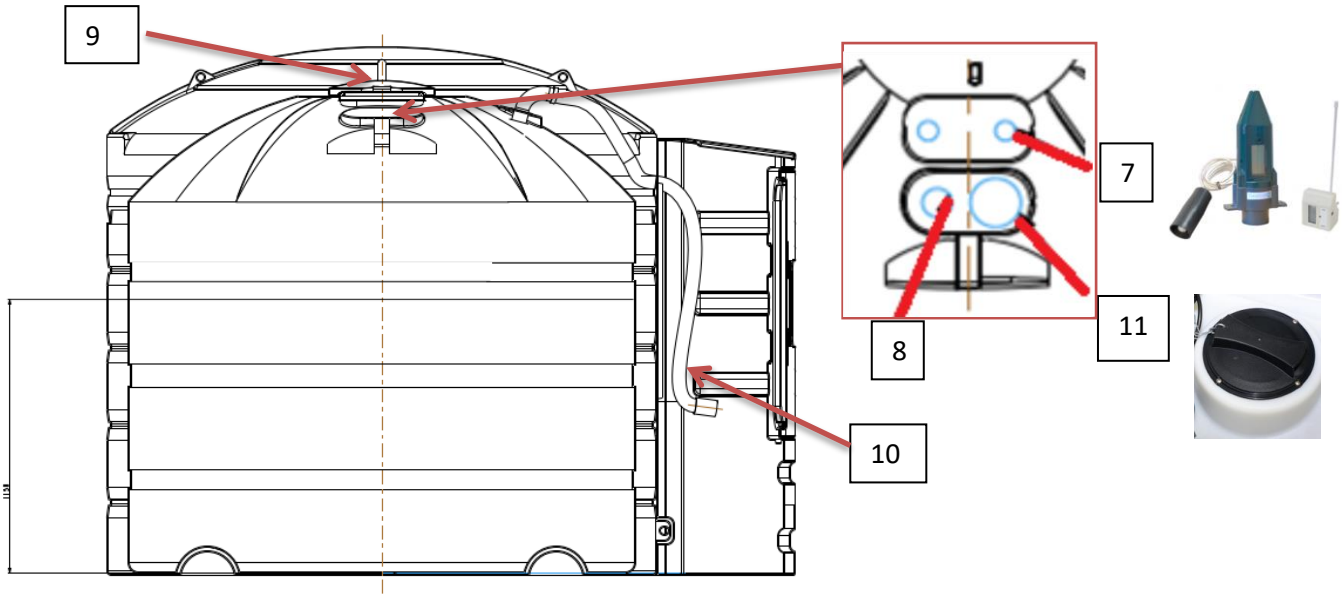

Rys. 2. Cross-section of the tank JFC9000

*Equipment may vary depending on specification of the order

Appendix No 1 contains the dimensional drawing of the JFC9000 tank.

III. OPERATION

The fuel tank JFC9000 has been designed and built to be, safe and not requiring complicated maintenance.

Upon receipt, check the tank, completeness of its equipment and whether no damage occurred during transport. If the tank is fitted with a pumping and distribution unit it is ready for operation just after filling the fuel and connecting to power supply.

The user must comply with national legal requirements regarding the installation and operation of the product, as well as the recommendations of local fire protection and environmental protection services. The owner and users of the facility should take adequate safety measures, according to the nature and extent of foreseeable dangers, in order to prevent damage and injuries and, if necessary, in order to minimize their effects. In the event of an immediate threat to public safety, they should notify the emergency services and provide them with the information needed to take action. The obligations in this scope are determined in relevant national regulations.

The equipment for the distribution and storage of diesel oil is subject to supervision by the Office of Technical Inspection, which unit should determine the form of its technical supervision in the scope of approval for use and frequency of periodic testing.

A permanent and legible label is mounted on the tank in an accessible and visible place, resistant to corrosion and operating utility, hereinafter referred to as "nameplate". The nameplate contains the following information:

1) Manufacturer name
2) Type
3) Tank location
4) Year of manufacture
5) Capacity
6) Serial number XXX - YYY / ZZZ; XXX – outer tank serial No.; YYY – inner tank serial No.; ZZZ – set No;
7) Names of operating utilities, which the tank is intended for
8) Direction of installation
9) Testing pressure
10) Working pressure
11) Material
12) Quality control.

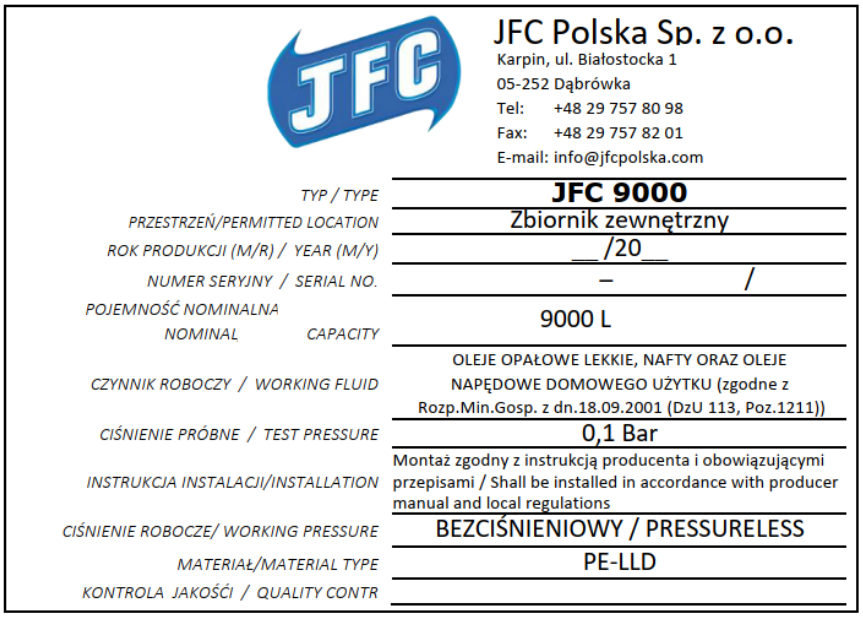

JFC Polska Sp. z o.o.
Karpin, ul. Białostocka 1
05-252 Dąbrówka
Tel: +48 29 757 80 98
Fax: +48 29 757 82 01
E-mail: info@jfcpolska.com

TYP / TYPE	**JFC 9000**
PRZESTRZEŃ/PERMITTED LOCATION	Zbiornik zewnętrzny
ROK PRODUKCJI (M/R) / YEAR (M/Y)	__/20__
NUMER SERYJNY / SERIAL NO.	– /
POJEMNOŚĆ NOMINALNA NOMINAL CAPACITY	9000 L
CZYNNIK ROBOCZY / WORKING FLUID	OLEJE OPAŁOWE LEKKIE, NAFTY ORAZ OLEJE NAPĘDOWE DOMOWEGO UŻYTKU (zgodne z Rozp.Min.Gosp. z dn.18.09.2001 (DzU 113, Poz.1211))
CIŚNIENIE PRÓBNE / TEST PRESSURE	0,1 Bar
INSTRUKCJA INSTALACJI/INSTALLATION	Montaż zgodny z instrukcją producenta i obowiązującymi przepisami / Shall be installed in accordance with producer manual and local regulations
CIŚNIENIE ROBOCZE/ WORKING PRESSURE	BEZCIŚNIENIOWY / PRESSURELESS
MATERIAŁ/MATERIAL TYPE	PE-LLD
KONTROLA JAKOŚĆI / QUALITY CONTR	

Due to the nature of the stored liquid and possible risks to the environment, it is necessary to observe the following instructions:

- The fuel tank should be filled via a filler pipe DN50 with Camlock or TW coupling situated under the tank flap. If the tank is equipped with a bottom filling line the hose must be connected to a 2”/3” quick-connector in the distribution box.

Do not overfill the tank! Fuel station is equipped with GWD – overfill protection valve. Tank truck should be connected with GWD during loading JFC9000. GWD plug connector is situated in distribution box or under the tank flap.

- To prevent contamination and damage to the pumping system, the contaminated fuel must not be stored in the tank!
- Before starting, read and observe the service manual.
- Filling and refuelling should be done under the supervision of an authorized worker.
- During transportation and storage of the fuel tank, no damage to the tank may occur (see guidelines for transport). Only an **empty** tank can be transported.
- Tank equipment should always be kept serviceable.
- If the unit is fitted with a pump powered 230V/50Hz, connect the grounding (provided with the tank), and perform electrical installation in accordance with the pump manufacturer's guidelines (see appendix to the documentation) and the applicable regulations.
- In case of insufficient delivery, clean the suction hose filter and the pump strainer. If some additional oil filters and water separators are installed it is necessary to check their cleanness and replace if necessary.
- Calibrate the flow meter periodically according to the guidelines contained in the manual. If the system is fitted with a digital flow meter it is necessary to replace the batteries periodically.
- Periodically check and maintain a leak sensor, according to the guidelines contained in the service manual.
- The device must be protected against unauthorized access.
- Any changes in the design, equipment and destination of the device are **not permitted** without the consent of the manufacturer.

In case of damage to the fuel tank or part of its equipment it must not be used until rectified. If some leakage of the tank is stated, the fuel must be pumped into another tank. Inform the supplier of the equipment.

For purposes of eg., the periodic inventory of the current fuel amount in the tank, the table is given below with the device height/capacity specifications:

Tank JFC 9000		Tank JFC 9000	
Height [mm]	Capacity [mm]*	Height [mm]	Capacity [mm]*
2225	9000	1150	5000
2200	8950	1100	4800
2100	8800	1000	4400
2000	8600	900	4010
1900	8230	800	3550
1800	7870	700	3060
1700	7450	600	2650
1600	7040	500	2160
1500	6590	400	1750
1400	6050	300	1310
1300	5710	200	900
1200	5300	100	410

*Approximate values

NOTES:

The data in the table are encumbered with the errors caused by thermal expansion of polyethylene from which the tanks are made. Considering the impurities which may accumulate on the bottom of the tank

over time, the suction stub-pipe was placed several centimetres above the bottom so that the settlement is not sucked into the pump. This results in the rise of the so-called “dead zone”, which forms a volume of about 100 L of fuel, which is impounded in the tank.

1. TRANSPORTATION AND FOUNDATION – guidelines

The tank and instrumentation must be transported in a safe manner to exclude mechanical damage. DO NOT TRANSPORT THE TANK FILLED WITH FUEL! Loading and unloading should be done with the use of specialized equipment, such like a forklift truck, crane etc.
The tank must not be rolled, shifted, etc..
Before transporting carefully close all flaps and doors (do not use these elements as the transport handles).
The tanks during transport must be secured against displacement. The tank during transport should be protected with transportation belts in a manner not damaging the tank structure. The transport space must be even and without sharp edges.
The location of the tank in Poland must take into account the guidelines of the Regulation of MSWiA (Journal of Laws of 22.06.2010) on the fire protection of buildings, other civil structures and sites:

- minimum distance from residential or public utility buildings is 10 m
- minimum distance from other buildings and from the border of neighbouring plot is 5 m.

These distances can be reduced by half, provided that the fire separation wall with a fire resistance class at least of REI120 is applied between the building or civil structure and the tank, hiding the tank from the side of the building or civil structure. The outer wall of a building or civil structure from the side of the tank can be made as a fire separation wall, as referred to above.
The location of tank should comply with local regulations9
The tank must be founded in a stable manner on a flat, level and even surface. This surface must be free of sharp edges and non-flammable.
The device cannot be located in garages or on the sidewalks.
The device must be protected against access of unauthorized persons.
The location of the tank must provide a safe, collision-free movement of tank trucks and vehicles serviced by the distributor.
An adequate service space should be provided around the device, allowing free access for periodic inspection or maintenance.
Tank location must comply with the regulations in force in the given country.

2. ELECTRICAL CONNECTION – guidelines

Electrical works have to be performed by a competent registered electrician.
As standard, JFC devices with a pumping system are supplied with 230V / 50Hz. Use a 3x2.5mm2 power cord. The power line should be protected by a fuse of the appropriate value (on the customer's side).

2.1. Ground

In order to ensure safe operation of JFC devices equipped with electrical distribution systems, an installation should be made that effectively discharges electric charges from electrostatic charges from the surface of a plastic container, as well as from electrical devices in pump system. For this purpose there should be grounding installation made of copper or galvanized wire diameter 16mm^2 installed nearby to the tank. Minimum depth of digging the ground electrode is about 1 m (depending on the type

of soil on which the tank is located). A grounding screw connected to the outside of the distribution box should be connected to the earth electrode, which is connected to the distribution mounting plate:





The connection should be made with a grounding cable with a resistance of less than 10Ω.
Electrical connections should be made by a qualified electrician.

2.2. Over-current fuse

In addition to the protection in the electrical box of the pump there should also be a protection of an over-current fuse with a value of C16A (value of the tripping current 16A, characteristics type C) in the power box.
NOTE: Permanent electrical connection of JFC devices should be made by an electrician with valid electrical permissions in accordance with applicable regulations and technical knowledge.

2.3. Temporary power supply

Temporary JFC power connections can be made using an extension cable with the following parameters:
- minimum diameter 3x2,5 mm2,
- copper wire - cable,
- PE plug (ground),
- at least IP65 protection,
- the fuse value of the extension supply line should be C16A (see above),
- the extension cord must not have abrasions, insulation damage, loose plugs, etc. damages affecting the technical condition,
- connection of the extension cable should be made with the pump switched off (pump switch in the OFF position),
- temporary connection should be connected only during refueling, then they should be disconnected while the device is idle,
- protect the extension cord against moisture.

3. MAINTENANCE OF JFC9000 TANK

The following table shows the procedure during the operation of the tank JFC9000.

No	Activities	Frequency of activity
1	Check the technical condition, completeness of JFC 9000	Before starting
2	Check the technical condition of electrical wiring	Before starting
3	Check the grounding condition, cable integrity	Every 6 months
4	Check the strainer, clean if necessary	Every 6 months
5	Check the level sensor	Every 6 months
6	Calibrate the flow meter	Every 2 months or 40000 litres
7	Control of the leakage sensor	Every 6 months
8	Check the vent line of the pump	Every 6 months
9	Check the distribution system	Every 6 months
10	Check that there are no contaminants in the tank	Every 6 months
11	Clean the accessories	Every 6 months
12	Check connections for leaks	Every 6 months

Detailed information on the operation and maintenance of the devices of the distribution system (pump, flow meter, leak sensor, etc.) are included in the operating and maintenance manual of the manufacturer of these devices.

IV. SAFETY RULES DURING OPERATION OF JFC9000 TANK

1. Information about the dangerous substance

Diesel oil is a commonly used fuel for diesel engines used in vehicles, stationary equipment, construction machinery and all kinds of agricultural machinery.
Diesel as a combustible liquid is classified in accordance with § 2 of the ordinance [1] to class III due to its ignition temperature. It is a liquid obtained by the distillation of crude oil, consisting mainly of a mixture of hydrocarbons having a carbon number from C9 to C20.
Pour point depending on the grade from - 4 ° C to - 40 ° C..
Flash point from 56 °C to 64 °C..
Auto-ignition temperature from 270 °C.
Diesel oil vapours are about 6 times heavier than air and accumulate at the ground surface and at the lower parts of premises and land depressions. Under specific conditions, diesel oil vapours may form an explosive mixture with air.
Diesel oil is available at filling stations that must meet stringent provisions of the Regulation[1] [1], but it is possible, in accordance with the current law, to use the tank with diesel oil for their own by civilians and legal person to power a variety of devices.

[1] [1] - Regulation of the Minister of Economy of 21 November 2005 on the technical conditions to be met by bases and liquid fuel stations, long distance pipelines for the transport of crude oil and petroleum products and their location (Journal of Laws No. 243, item 2060 as amended)

2. Hazards that may be posed by stored material (diesel) and ways of minimizing them

During operation of the JFC9000 tank the users are required to:

- use protective gloves when refuelling
- protect their skin from repetitive or prolonged contact with diesel oil
- immediately wash the body part with soap and water in case of contamination
- not to eat or drink when operating JFC9000
- In the area immediately adjacent to the device it is prohibited to use open flames, smoking, and use of any other factors which may ignite the diesel oil.
- Toxic oil fumes may cause irreversible changes in health; when handling diesel particular caution should be exercised.
- Protect your eyes, because there is a risk of exposure, wear protective goggles,
- Diesel is toxic for aquatic and terrestrial organisms, may cause long-term adverse effects in the environment
- It increases fire hazard; vapour form explosive mixtures with air, are heavier from the air, accumulate at the land surface and at the lower parts of premises.
- It is forbidden to park vehicles near the tank.
- The protective lane must be kept around the device, with a minimum width of 2 m from the surface from non-combustible materials or from the ground surface cleaned down to mineral course.
- The 12 kg's powder extinguisher shall be situated in the vicinity of the device, protected against atmospheric conditions and marked with a safety mark - "Fire Extinguisher" in accordance with the Polish Standard. The fire extinguisher must be subject to annual inspection of technical condition performed by an authorized person.
- The sign "No open flames and smoking" shall be affixed on the device, or in its vicinity, in accordance with the Polish Standard and the labelling of the substance stored in the tank, as well.

3. **Guidelines for persons authorized to operate the tank JFC9000**

JFC9000 can be operated by a person who is 18 years old, read the service manual and is acquainted with the rules of safe operation. Children and bystanders should be kept away from the operation. The tank operators should follow the service manual of the tank, and in particular:

- check that the specified parameters are not exceed, and if they are exceeded, take action as provided in the service manual aimed at bringing the parameters to an acceptable level,
- keep records of the operation of the tank or installation, in accordance with the service manual, as well as record all inspections, periodical tests and replacement of components and accessories.
- should take appropriate safety measures, according to the nature and extent of foreseeable dangers, in order to prevent damage and injuries and, if necessary, in order to minimize their effects. In the event of an immediate threat to public safety, they should notify the emergency services and provide them with the information needed to take action. Responsibilities are defines in relevant national rules.
- When the tank is filled with diesel oil for the first time the duties of driver/provider and owner of the device include the verification whether the device is set firmly, the tank is clean inside and empty. Refuelling should be done in two phases between which you should check the condition of the tank - if there are no leaks. Before the first filling of the tank the appropriate measures should be taken to prevent any possible threats in it or its environment.
  In a situation when the tank is away from the tanker, tank filling should always be supervised by another person or additional necessary persons.
  Do not exceed recommended <u>maximum filling speed of 350 l/min.</u>
  Pay special attention to the patency of the tank venting (breathing) stub-pipe, it cannot be clogged, blinded or fouled.
  If tank is assembled with down filling line do not exceed permissible flow and pressure range.

Flow rate: 35 l/min to 600 l/min Maximum pressure: 0,6 MPa (6 Bar)

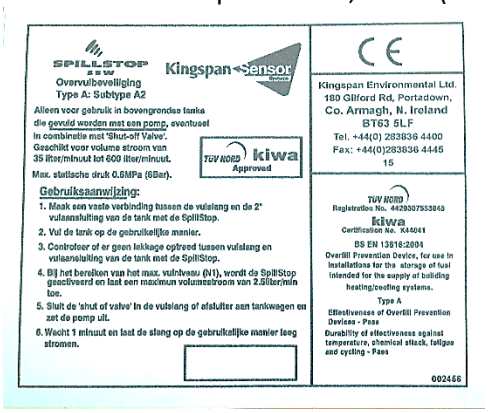

4. **Operations during refuelling.**
   During refuelling:
   - Perform a visual inspection of the device condition.
   - Make sure the distribution nozzle and the hose are in good condition, with no apparent external damage.
   - Drive the vehicle in the vicinity of the device and turn off the engine.
   - It is forbidden to stay inside the vehicle during refuelling.
   - After refuelling immediately drive away from the device.
   - During refuelling only one vehicle may stay at the tank. Another vehicle should be at a distance of 5 meters.
   - It is forbidden to park the vehicle during refuelling in a way that can hamper any possible evacuation from the fire danger zone.
   - In the event of fuel spills immediately remove contaminants using sorbents, dispersants, or other materials designed to remove diesel oil from the environment before the machine is restarted.
   - The device can be used at a temperature from -20 °C to +40 °C. Do not use the device in bad weather conditions such as heavy rain, strong wind, lightning, etc.

5. **In the unlikely event of failure to JFC9000 (tank leakage, electric shock) it is necessary to:**

   - discontinue any work in the affected area,
   - disconnect the power supply of the distributor,
   - help the victims - after making sure that it is safe to enter the danger zone,
   - notify the superior,
   - a person in a management position responsible for the warehouse or the area in which the threat occurred, or the person designated, shall manage the rescue operations and, if necessary, call the fire brigade,
   - in the event of a leak in the JFC9000 tank, pump its contents to another device,
   - call the manufacturer's authorized service.

V. WARRANTY

1. The manufacturer hereby grants:

- 10 year's warranty on the tank leak-tightness from the date of purchase.
- 2-year warranty for the distribution equipment installed in the tank, if the buyer is a natural person (if the customer is a business entity, the warranty is valid for one year) (according to the specification as above). The condition for obtaining a 2-year warranty is an inspection by an authorized service center after the first year of use (from the date of purchase).
  NOTE: The only exception are: pistol with a swivel connector, seals, and screw connections, which are subject to the initial warranty.

Each device receives a Declaration of Conformity at the time of purchase.
If any problem occurs despite of the use of all quality measures, please contact our customer service:

JFC Polska Sp. z o.o.
Karpin, ul. Białostocka 1
05-252 Dąbrówka
Tel. +48 29 757 80 98 @: info@jfcpolska.com

2. The revealed defects during the warranty period will be removed within two weeks from the date of the written notification of the defect (fault notification form in Service Manual). If the application is received on a business day, the company guarantees that the customer will receive feedback within 48 hours (counting business days).
3. If it turns out that the failure during the warranty period has been caused by improper conduct or installation of the product, or the damage occurred after the warranty, then the technical service costs are debited to the owner. By ordering a paid service, the customer agrees to issue an invoice for service activities not covered by the warranty.
4. The warranty does not cover:

• standard maintenance of the device, such as cleaning the filter, cleaning or replacing the bypass system in the pump, cleaning the pump chamber,
• battery replacement or fuses,
• flow meter calibration,
• replacement of blades or bearings in the pump in case of mechanical damage,
• replacement of a damaged pump in case of operating on dry-running,
• replacement of O-rings in pumps in the event of a leak,
• replacement of mechanically damaged hoses or hoses damaged after contact with non-compatible fluids,

5. The buyer loses the rights under the guarantee in the case of:

• damage caused by improper assembly and operation of the device
• no maintenance performed,
• mechanical damage or acts of vandalism,
• errors resulting from repairs or construction changes that have been made by unauthorized technical service,
• changes in the purpose of the product,
• damage due to a short circuit caused by improper electrical connection or overvoltages due to random events.

6. The manufacturer recommends periodic inspections at least every 6 months (or 100 thous. liters of fuel issued). Interim review is not covered by warranty and is a paid service.

The company JFC Poland Sp. z o. o. shall not be held liable for any damage resulting from the use of the product in an improper manner, contrary to the service manual and contrary to the regulations.

VI. OPERATING/ DAMAGE/ REPAIR REPORTS

Tab.1. List of standard maintenance activities for JFC9000

Activity	***Minimum frequency***	***Date***	***Date***	***Date***	***Date***
Check and clean the pump filter	Every 6 months				
Check and clean the flow meter filter (in the case of heavy pollution of the filters also check and clean the measuring chamber)	Every 6 months				
Check the flow meter battery condition	Every 6 months				
Calibrate the flow meter	Every 2 months or 40000L				
Check and clean the suction hose strainer					
Check the status of leak sensor and level sensor (the correctness of indications, connection status, batteries)	Every 6 months				
Clean the tank and components of its equipment (pump, flow meter, cables, housing, etc.)	Every 6 months				
Check the operation of the pumping system (tightness, efficiency, nozzle, etc.)	Every 6 months				
Check the condition of the tank and its equipment for completeness and mechanical damage	Every 6 months				
Check the electrical installation of the pump (correctness, connection, protection devices)	Every 6 months				
Lubricate door locks and padlocks	Every 6 months				

O – correctly **X** – incorrectly

NOTE: Activities included in the table above should be performed immediately if a malfunction is noted on JFC9000.

Tab.2. Report of damage and repairs of JFC9000

Date/Signature	***Type of damage and applied measures***

Tab.3. Failure Notification Form

FAILURE NOTIFICATION FORM No.: Date: _____

MAINTENANCE SERVICE ORDER

For: ***JFC Polska Sp. z o.o.*** *Karpin 1A, 05-252 Dąbrówka* *tel. +48 29 757 80 98* *fax. +48 29 757 82 01* *mail: info@jfcpolska.com*	**Buyer/Customer CODE** **Company/Name and Surname:** **Address:** **Contact person:** **Tel.:**
Proof of purchase No. (Invoice/Receipt) **Purchase date:**	**Tank location:** **Company/Name and Surname:** **Address:** **Contact person:** **Tel.:**

TANK DESCRIPTION: * Delete unnecessary		**Serial No. (on a nameplate):** **Warrant Card No.:**				
Tank type*:	JFC9000 JFC5000	JFC2500 JFC1600 JFC1300	TT 250	TT425	TT600	
Fuel type*:	Diesel	AdBlue				
Flow meter type*:	K24 K600 Modi-JFC	K33 K600-Pulser	RAASM	HORN		
Pump type*:	BP3000 (12V/24V)	Panther(12V)	Panther 56 (230V)	Panther 72 230V	E120	Modi _
Monitoring system:	Yes	No				

NOTIFICATION REASON/FAILURE DESCRIPTION:

Legible signature of the notifying person: _____

NOTE: If it turns out that the failure during the warranty period has been caused by improper conduct or installation of the product, or the damage occurred after the warranty, then the technical service costs are debited to the Owner.

DECISION OF SERVICE DEPARTMENT:

Legible signature: _____

DESCRIPTION OF PERFORMED REPAIRS:

Legible signature: _____

Filled by JFC Polska